www.optergy.com
info@optergy.com
Axon (DC-42)

Optergy
Insights



Axon

Installation Guide

Optergy Axon is a powerful, IoT platform that is purpose built for reliability and performance in both the Building Automation and Industrial IoT markets. Axon delivers real-time visualization, monitoring, control, and reporting through the Optergy Insights platform pre-installed at the edge. Getting a BMS or EMS into your building has never been this easy.

Axon Installation

Mount the Axon in one of two ways:

METHOD 1

Mount the controller to a DIN rail.

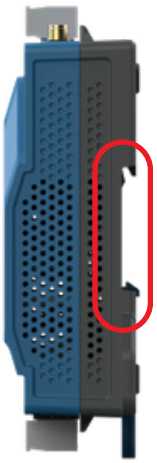

METHOD 2

Use the 2 screw holes to fasten with self tapping screws.



Power

Axon power can be supplied by:

- 24 VAC ½ wave
- 12-24VDC Power Supply

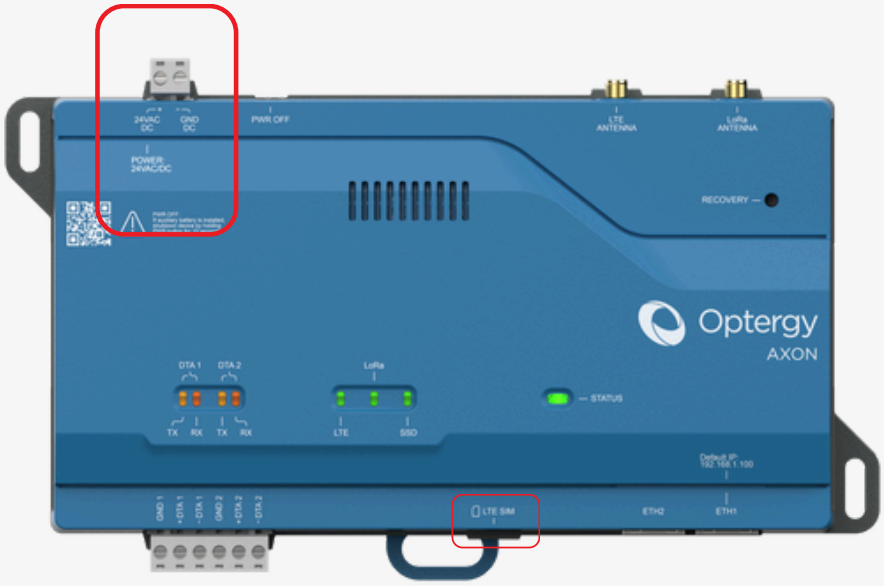

Axon Installation

DISK-1 is installed by default with a 500GB M.2 SSD, in addition to this the Axon also has 4 optional items that may be installed/replaced as required.

To access these option slots first disconnect power and then remove the 4 rear panel screws.



1. **DISK-1** - Axon's are pre-installed with a 500GB M.2 SSD, this can be replaced with a different M.2 SSD for larger capacity or SSD failures.

2. **DISK-2** - This 2nd M.2 slot can be used as backup storage.

3. **LTE Module** - LTE Module is currently in testing and will be available in the future.

4. **Battery Module** - This devices accepts a flat top 18650 Lithium Ion Battery for safe shutdown procedures.

5. **Lora Module** - Lora Module socket is currently in testing and will be available in the future.

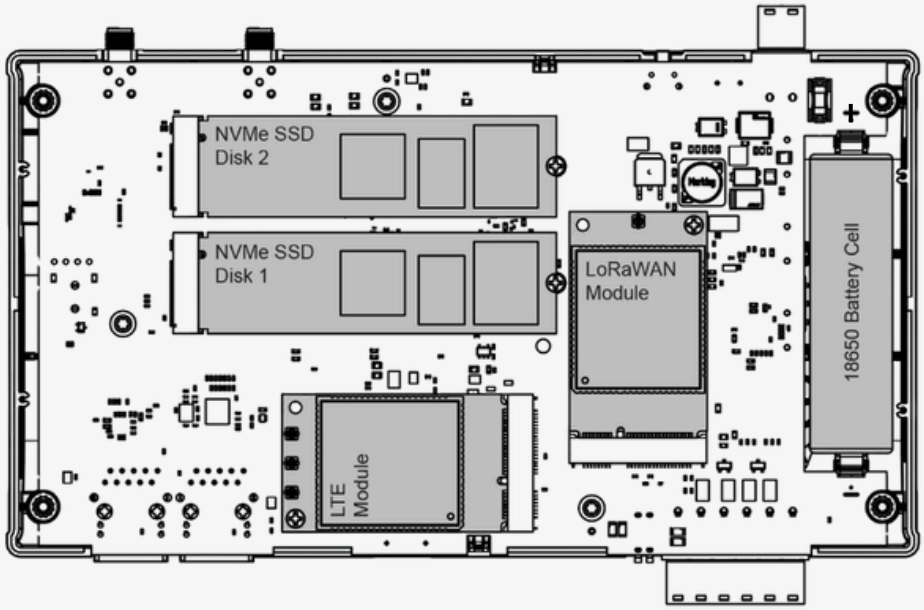

Opening the Axon Enclosure

Special care should be taken when removing the enclosure to avoid any damage to internal clips or mounting points.

1. **Remove 4x back enclosure screws**

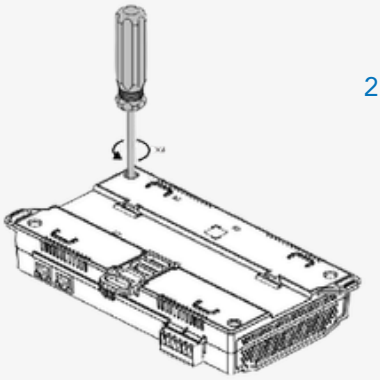

2. **Press highlighted area while open the device to release internal clips**

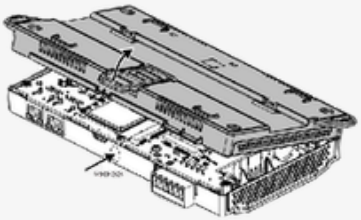

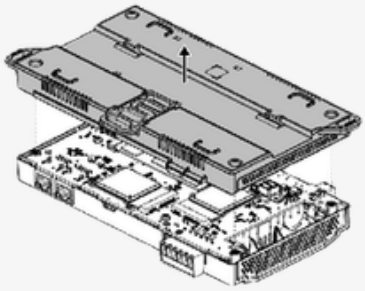

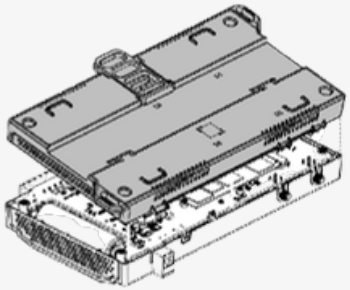

3. **To close the device, align the top edge with the corresponding groove/edge on the front enclosure**

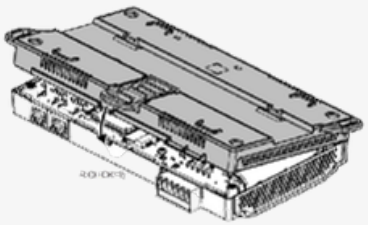

4. **Press together ensuring both clips have clicked into place**

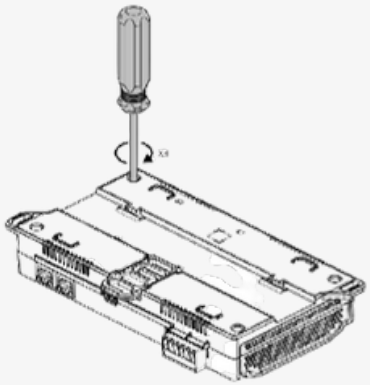

5. **Re-install 4x enclosure screws**

NOTE* PCB is exposed whilst completing this operation

It is highly recommend to conduct this in a safe, vibration free and dust free environment such as a clean office. Completing this type of modification in an active plant room significantly increases the risks of damage to the board.
Whilst the device is intended to be opened for Battery, SSD, 4G and Lorawan component installations damage to the PCB may void warranty.

Battery Replacement process

Special care should be taken when inserting or replacing the 18650 Lithium-ion flattop battery, note the following instructions

First remove external power from the device and then use a phillips head screwdriver to remove each screw.

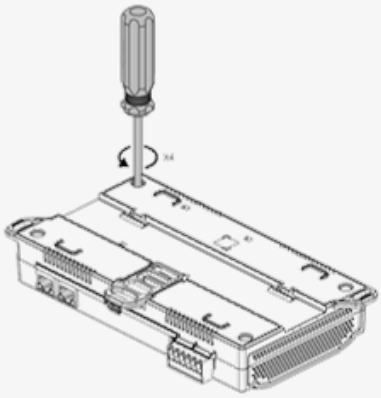

There are 4 screws in total to remove, you can then remove the backplate exposing internal components.

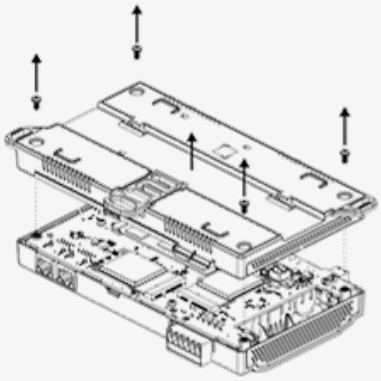

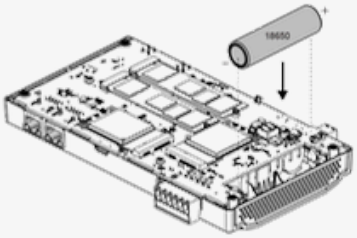

Carefully insert only a Flattop 18650 Lithium Ion Battery and ensure you carefully follow the prescribed labels for positive and negative orientation.

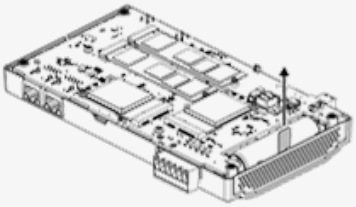

To remove a battery pull the plastic tab, do not utilize any tools as this may damage components or cause a safety risk.

DISPOSE OF USED BATTERIES RESPONSIBILY!

Used 18650 lithium-ion batteries must be disposed of responsibly to prevent environmental harm, fire risk, and injury. Do not place lithium-ion batteries in household rubbish or general recycling bins. Store used batteries in a cool, dry place away from metal objects and physical damage until they can be taken to an authorised battery collection or recycling point.

Because regulations differ between countries and regions, always follow all applicable local laws and guidelines for battery disposal, recycling, and transportation. If unsure, contact your local waste authority or a certified recycling facility for correct handling procedures.

TCP/IP Communication

Both ETH1 and ETH2 can be used for connection to the user interface via HTTPS web browser.

Default configuration of ETH1 is Static IP address of 192.168.1.10

Default configuration of ETH2 is DHCP

Once connected the exact functionality of these ports can be configued.

To Reset the Axon, hold down the recovery button for 10 seonds or until you will see the status light begin to flash yellow.

Once the lights flash yellow release the Recovery button and the Axon will reboot and enter Recovery Mode.

To access Recovery Mode connect to ETH1 and go to IP Address 192.168.1.11

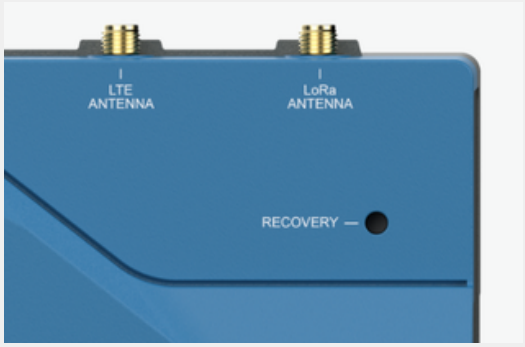

Recovery Mode

Once you enter **http://192.168.1.11/index.html** you can use the following credentials to access Recovery mode.
User: **recovery**
Pass: **OptergyRecovery123!**

From Recovery mode you can complete the following actions:

1. See information related to disk consumption, partitions, MACs and Serial Number.
2. Access **Standard** Recovery Options
    a. Reset Axon Setup Wizard (allow creation of new Admin user)
    b. Reset Axon Network Configuration (ETH1 = 192.168.1.10, ETH2=DHCP)
    c. Remove Axon Log Files (freeing up disk space)
    d. Remove Old Axon Backups (freeing up disk space)
    e. Reboot the Device

From this portal there are also **Advanced** Recovery Options that Optergy Support can ultilize, they may request you initiate access to this portal to proceed with any of these options.

LTE Communication

To enable LTE, insert an LTE-enabled SIM card into the "LTE SIM" slot at the bottom of the device and connect a suitable antenna to the "LTE ANTENNA" connection point on top.

An LTE antenna is supplied in the box, but it is only suitable for Axons installed in open air — mounting inside an enclosure will block the signal.

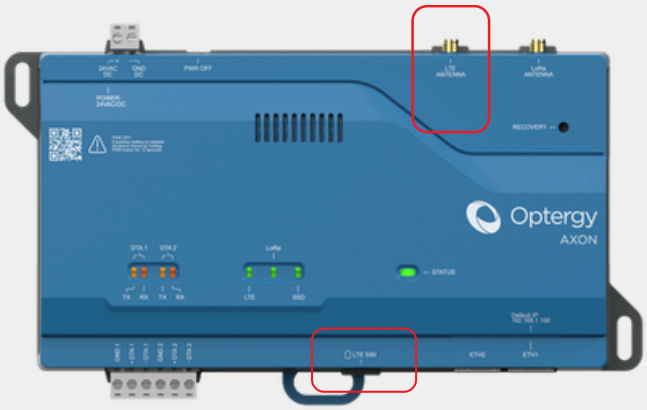

Installing Axon's into a panel

When an Axon is installed inside a metal panel or enclosure, the enclosure acts as a Faraday cage and blocks the cellular signal. The supplied antenna is for open-mount installations only — enclosed installations require a remote antenna mounted outside the enclosure and cabled to the "LTE ANTENNA" connection point.

Many antenna types are aviailable on the market however two common types are: a bracket-mount antenna for fixing to a wall or panel exterior, and a magnetic-base whip antenna that mounts to the top of a metal enclosure (the metal surface improves performance by acting as a ground plane).

LTE is currently only enabled for NovaQ enabled Axon's, if you've purchased an Axon with the standard Insights Licence this is **not yet** available.



Installation notes:

- Specific 4G/GSM antenna must be used **not WIFI**
- Route the cable through a cable gland; avoid kinks and keep the run short
- Weatherproof all penetrations with IP-rated glands or neutral-cure sealant to prevent water ingress
- Roof-mounted antennas fall outside the building's existing lightning protection. For these installations, fit an inline coaxial surge arrestor at the cable entry point, bonded to earth in accordance with **AS/NZS 1768** (or equivalent).

RS-485 Communication Wiring

The Axon contains 2 RS-485 ports capable of Modbus RTU or BACnet MSTP communication.

This is a 2 wire + shield type of communication termination and for this setup the following wiring rules should be adhered to.
-Shield must be carried through and single point to earth ground.
-Use low capacitance cable in accordance with BACnet specification.
-Ensure you ultilize a 120 ohm resister at the beginning and end of the network

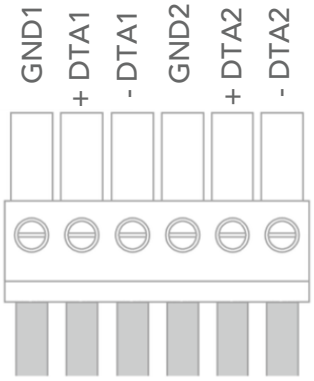

Recommended wire size 28AWG - 16AWG.



Status LED

The Axon has a status LED that indicates:

Green Blink = Initialization
Green Solid = Normal Operation
Red Blink = Runtime Error
Red Solid = Start-up Error
Blue Blink = Firmware Update
Yellow Blink = Recovery Mode Intialization
Yellow Solid = Recovery Mode

