Optergy
Talos

ENERGY MANAGEMENT ON AXON

Optergy Talos

Talos is Optergy's energy management application, running on the Axon edge controller. It collects, trends, alarms and reports on energy and utility meters on site, and makes that data available to other systems through a REST API and a Model Context Protocol (MCP) server.



TAL-50	TAL-100	TAL-200
50 meters	**100** meters	**200** meters

Licensed by meters.
Every feature in every licence.

Physical meters are counted per load. Virtual and calculated meters do not count.

INCLUDED IN TAL-50, TAL-100 AND TAL-200

CORE TALOS FEATURES

ENERGY & UTILITY REPORTING

Pre-packaged meter and utility reports over set time periods, plus custom reports. Output to web, PDF and CSV, and emailed automatically at predetermined intervals.

TRENDS & LIVE DASHBOARDS

Live graphical meter displays and trend graphs over any defined interval. End-user dashboards are configured in the browser — no client software.

REST API

Integrate Talos meter data with third-party platforms and custom applications through the REST API.

BACNET & MODBUS METERING

Meters connect over BACnet/IP and Modbus TCP, or BACnet MS/TP and Modbus RTU on the Axon's two onboard RS-485 ports.

ALARMS, ESCALATION & NOTIFICATION

Alarms on meter parameters, with acknowledge and clear. Unacknowledged alarms escalate by email to further recipients after a user-defined period.

METER HIERARCHY & VIRTUAL METERS

Meter status and hierarchy screens, with meters associated to sites, buildings and spaces. Calculated (virtual) meters are built from physical meter data.

MCP SERVER

Built-in Model Context Protocol (MCP) server for connecting AI assistants and agents to Talos energy data.

AUTOMATIC LICENCE ACTIVATION

The licence is bound to the Axon serial number and activates automatically on first internet connection. Offline sites use a manual licence file download and upload.

SCOPE AND LIMITS

- Licensed by physical meter count only (50, 100 or 200), counted per load: a dual-load physical meter uses 2 meter licences. Virtual and calculated meters do not count. Devices are not licensed.
- Talos is an energy management application. Building control functions — schedules, optimum start, demand limiting — are not included; use Optergy Insights on Axon or Optergy Enterprise.
- Tenant, utility and after-hours billing are not included in Talos.

IDENTIFICATION

Product	Optergy Talos
Licences	TAL-50, TAL-100, TAL-200
Hardware	Axon-V1
Users	Unlimited

Optergy

Talos

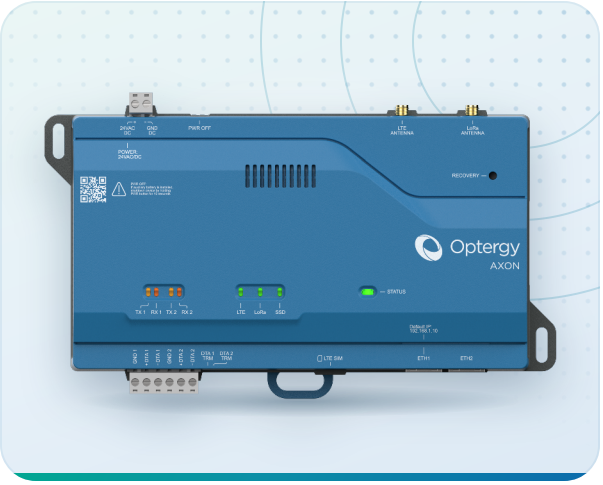

Talos Licencing for Axon	TAL 50	TAL 100	TAL 200
Physical meters (per load)	**50**	**100**	**200**
Energy & utility reports	✔	✔	✔
Scheduled email reports	✔	✔	✔
Alarms, escalation & email notification	✔	✔	✔
Trends & live dashboards	✔	✔	✔
Meter hierarchy & spaces	✔	✔	✔
REST API	✔	✔	✔
MCP server	✔	✔	✔
Automatic & offline licence activation	✔	✔	✔
Users	Unlimited	Unlimited	Unlimited
Virtual & calculated meters	Not counted	Not counted	Not counted

Physical meter count is the only variable, counted per load: a dual-load physical meter uses 2 meter licences. Every feature is included in every licence.

HARDWARE SPECIFICATIONS

Model	Axon-V1
Processor	ARM Cortex-A76 2.4GHz + Cortex-A55 1.8GHz (8 Cores Total)
Ethernet	2 * Gigabit Ethernet Port supporting different IP subnets
Storage	512GB NVME SSD + 2nd optional NVME Slot
RAM	8GB LPDDR4x
Terminals	1x Power Terminal, 1x Serial Port Terminal
RS-485 Ports	2xRS-485 Ports (9.6K, 19.2K, 38.4K, 76.8K, 115.2K)
Power	2-Pin Terminal, 24VAC (1/2 wave) or 24VDC (Class 2) Max load: 40 VA with 24 VAC or 40 W with 24 VDC
Operating Temp	-4°F (-20°C) to +140°F (+60°C)
Storage Temp	-40°F (-40°C) to +185°F (+85°C)
Humidity	0 to 95% RH (non-condensing)
LTE (Optional)	1 * 4G LTE Cat 4 (Nano-Sim), LTE-FDD: B1/22 /3/4/5/7/8/28; LTE-TDD: B40; WCDMA: B1/2/4/5/8 ; GSM: B2/3/5/8
Lora (Optional)	Semtech Network's SX1302 LoRaWAN® Supporting NA/AU/AS (915MHz) or EU (868MHz)
RTC	Real Time Clock supported via Super Capacitor for up to 5 days
Battery Add-on	Supports optional 18650 Lithium-Ion Battery for Battery Backup
Country of Origin	Australia

HARDWARE DIMENSIONS

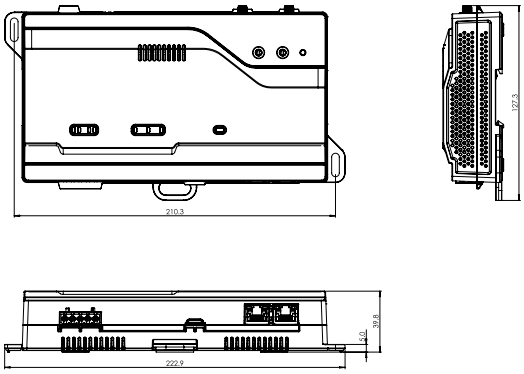

All dimensions in mm. DIN rail or surface mount.

Agency Certifications

This device complies with Part 15 of the FCC rules. Operation is subject to the following two conditions: (1) This device may not cause harmful interference, and (2) This device must accept any interference received, including interference that may cause undesired operation.

c UL us LISTED E507611

Operating Control, Network Energy Management Controller
Purpose of Control: Network Energy Management Controller
Construction of control: Independently Mounted Control for Surface Mount or DIN Rail
Impulse Voltage: 330V
Pollution Degree: 2
SELV Levels: 24V
Automatic action: Type 1 Action

All specifications are subject to change without notice.

Optergy